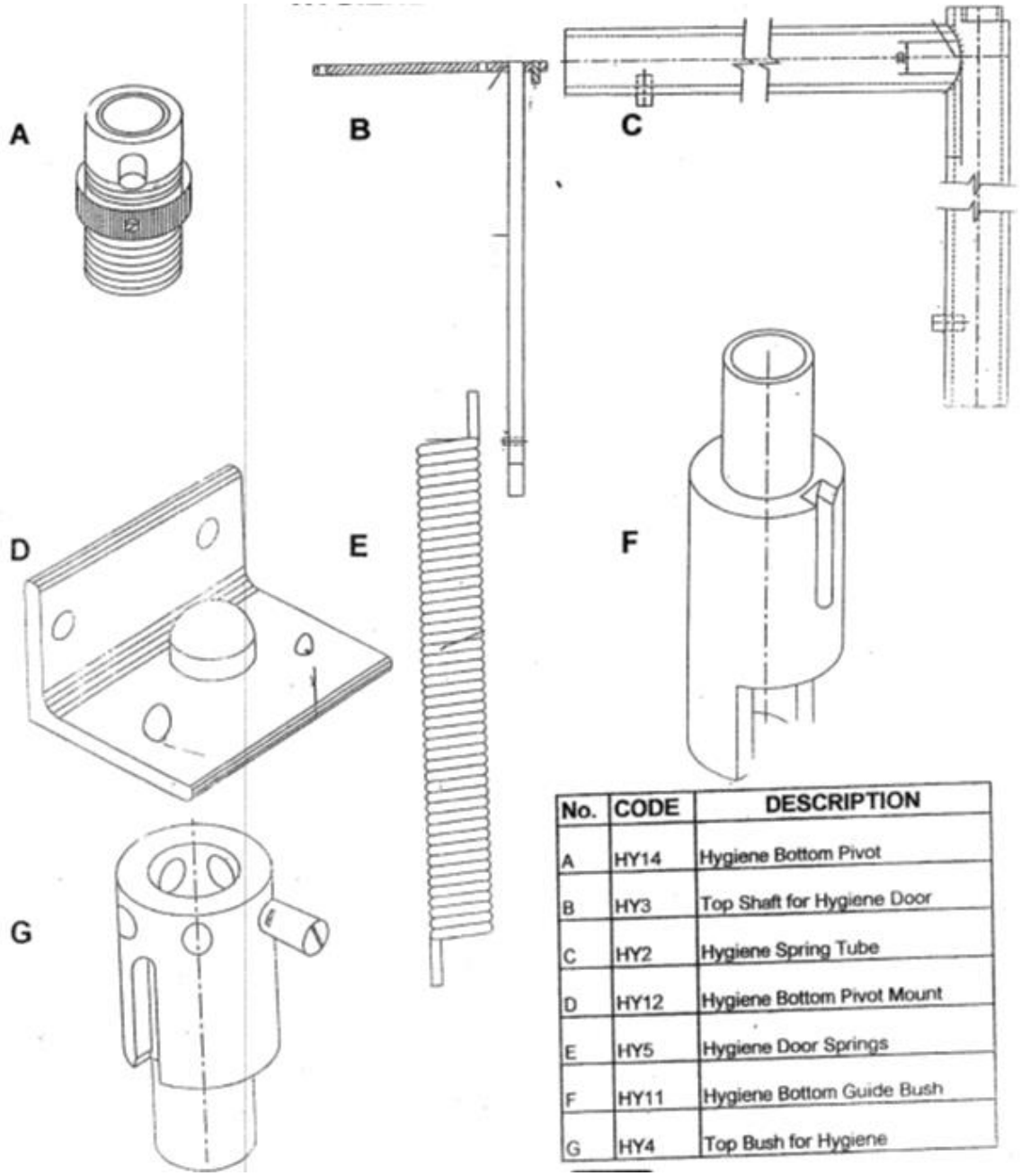

No.	CODE	DESCRIPTION
A	HY14	Hygiene Bottom Pivot
B	HY3	Top Shaft for Hygiene Door
C	HY2	Hygiene Spring Tube
D	HY12	Hygiene Bottom Pivot Mount
E	HY5	Hygiene Door Springs
F	HY11	Hygiene Bottom Guide Bush
G	HY4	Top Bush for Hygiene

AceDoors
Commercial Door Solution Specialist

PVC HYGIENE SWING DOOR PARTS

DWG NO: PVCP01